Experiment-1

Aim: To design and verify truth table of logic gates

Tools: Logisim 2.7.1 (open source)

Theory: (a) Include logic diagram and truth table (TT) of basic gates (AND gate, OR gate and NOT gate.

(b) Include logic diagram and truth table (TT) of XOR gate.

(c) Include truth table and logic diagram for realization of AND and OR gates using NAND gate.

Observation:

(A) <u>Logic Diagram and Truth Table of Basic Gates:</u>

- **Logic Diagram of AND Gate:**

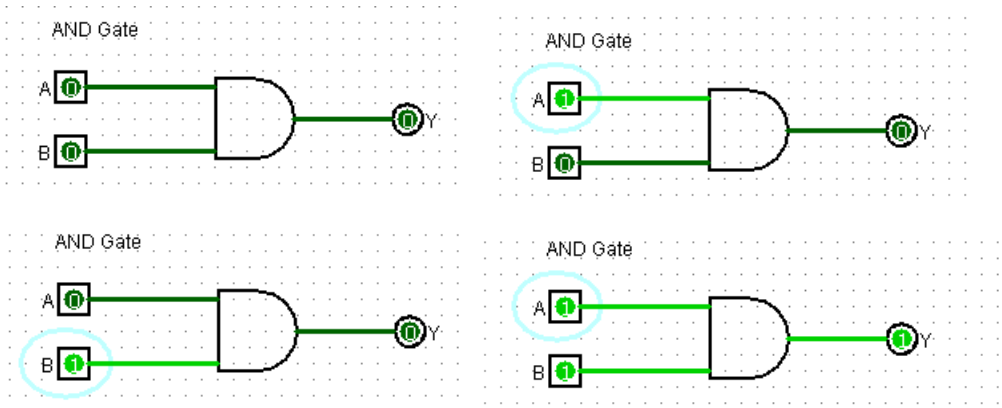

- Truth table of AND Gate:

AND Gate		
A	**B**	**Y**
0	0	0
0	1	0
1	0	0
1	1	1

- **Logic Diagram of OR Gate:**

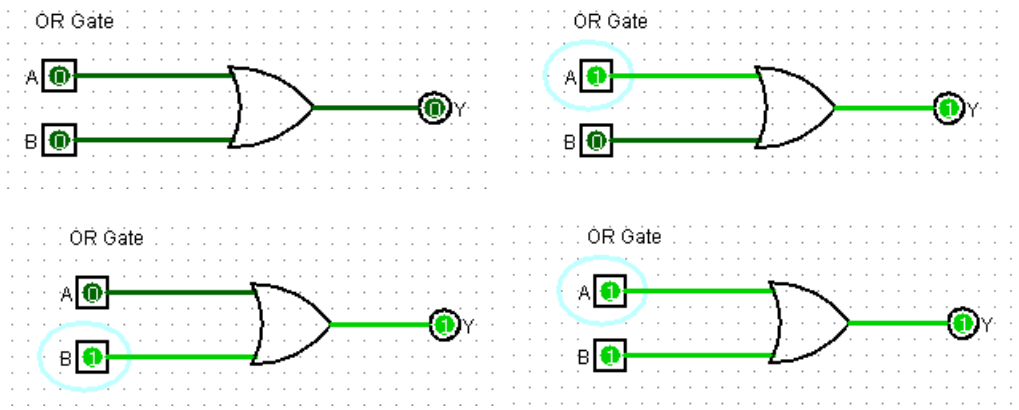

- Truth table of OR Gate:

OR Gate		
A	**B**	**Y**
0	0	0
0	1	1
1	0	1
1	1	1

- **Logic Diagram of NOT Gate:**

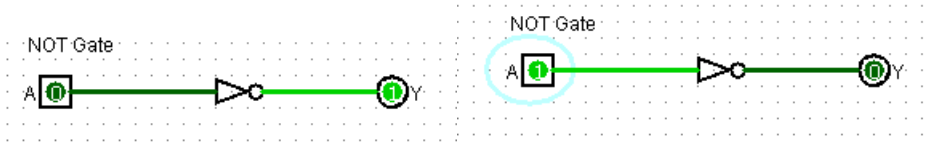

- Truth table of NOT Gate:

NOT Gate	
A	**Y**
0	1
1	0

(B) Logic Diagram and Truth Table of Universal and Secondary Gates:

- **Logic Diagram of NAND Gate:**

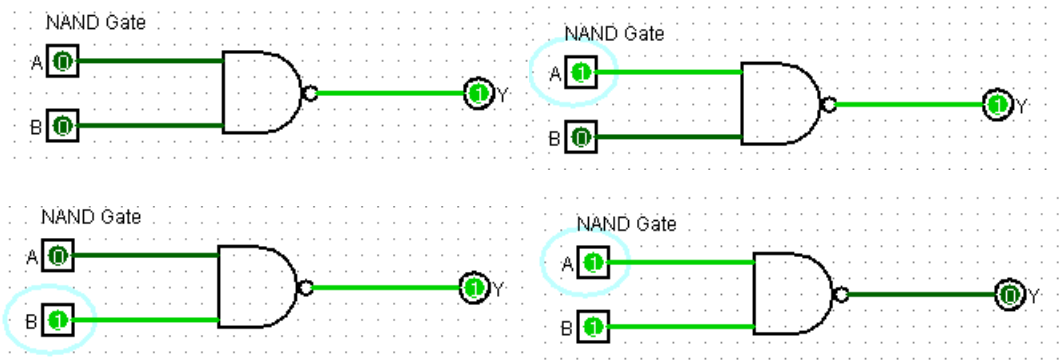

- Truth table of NAND Gate:

NAND Gate		
A	**B**	**Y**
0	0	1
0	1	1
1	0	1
1	1	0

- **Logic Diagram of NOR Gate:**

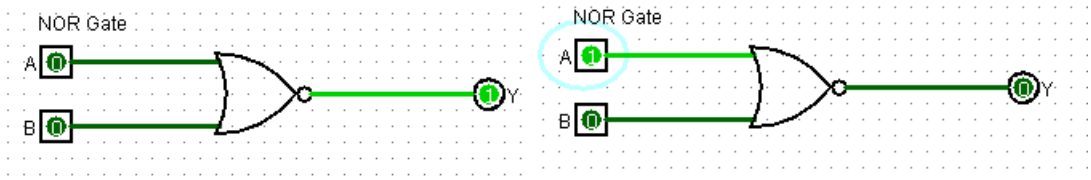

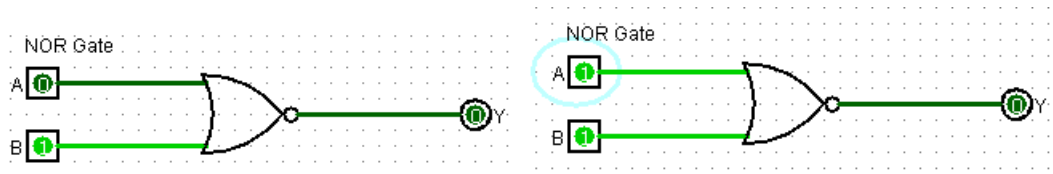

- Truth table of NOR Gate:

NOR Gate		
A	**B**	**Y**
0	0	1
0	1	0
1	0	0
1	1	0

- **Logic Diagram of Ex-OR Gate:**

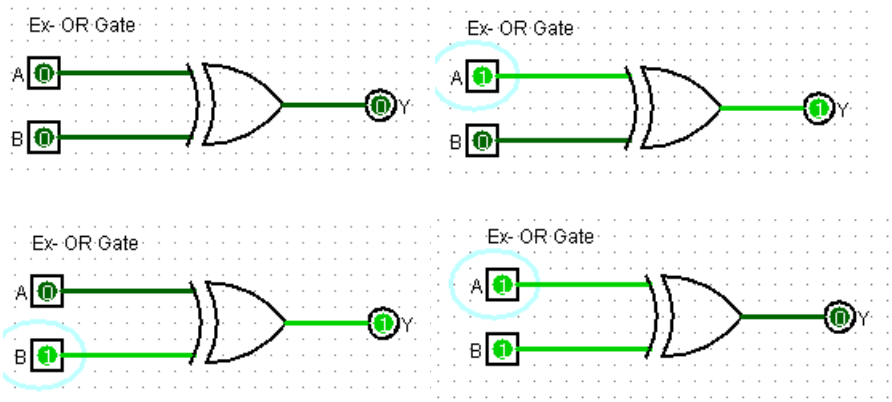

- Truth table of Ex-OR Gate:

Ex-OR Gate		
A	**B**	**Y**
0	0	0
0	1	1
1	0	1
1	1	0

- **Logic Diagram of Ex-NOR Gate:**

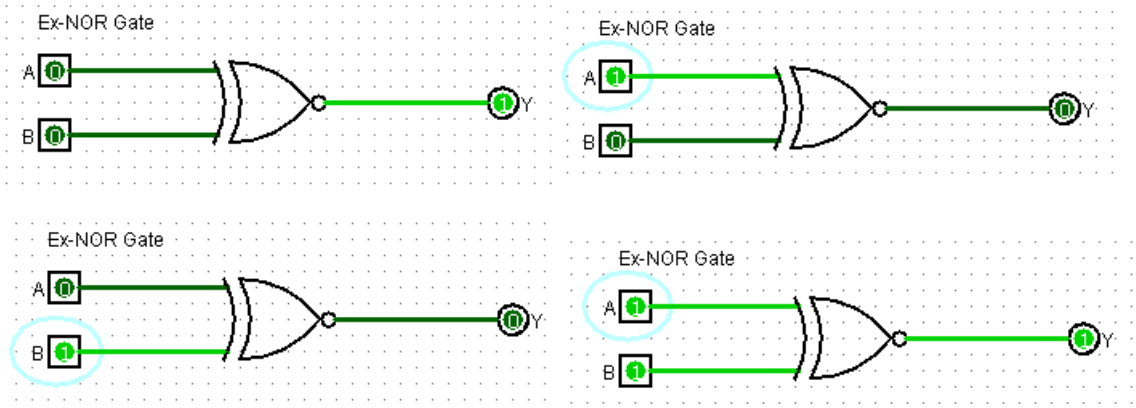

  - Truth table of Ex-NOR Gate:

Ex-NOR Gate		
A	**B**	**Y**
0	0	1
0	1	0
1	0	0
1	1	1

(C) <u>Realization of Logic Gates using Universal Gates:</u>

- **Implementation of AND Gate USING NOR Gate:**

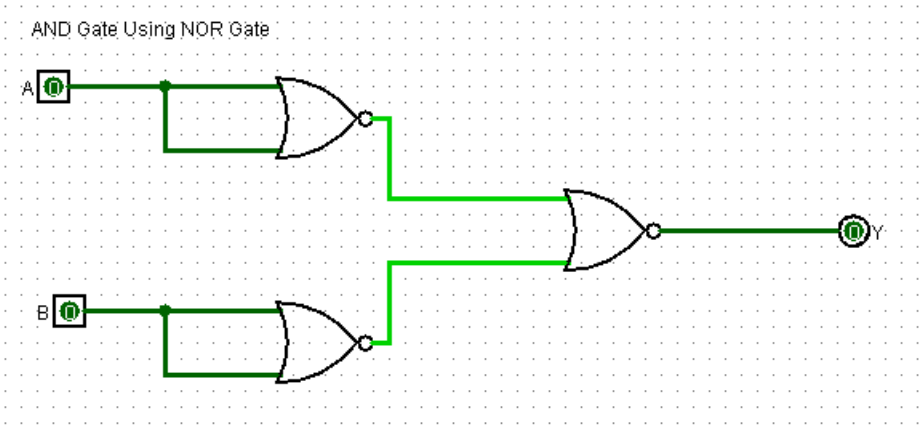

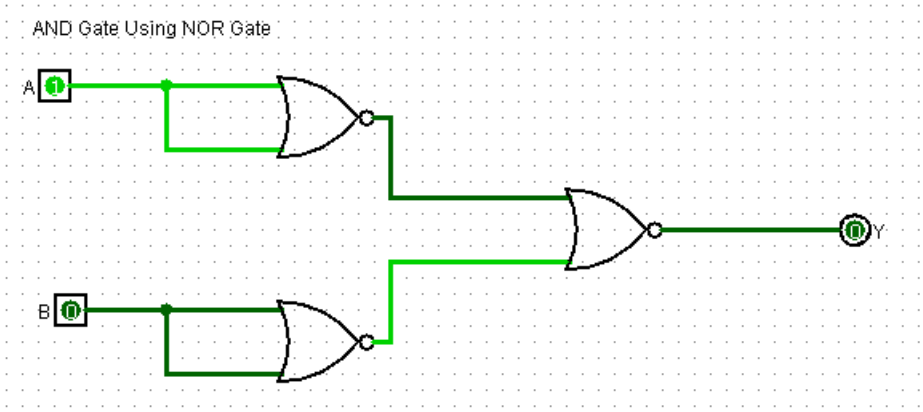

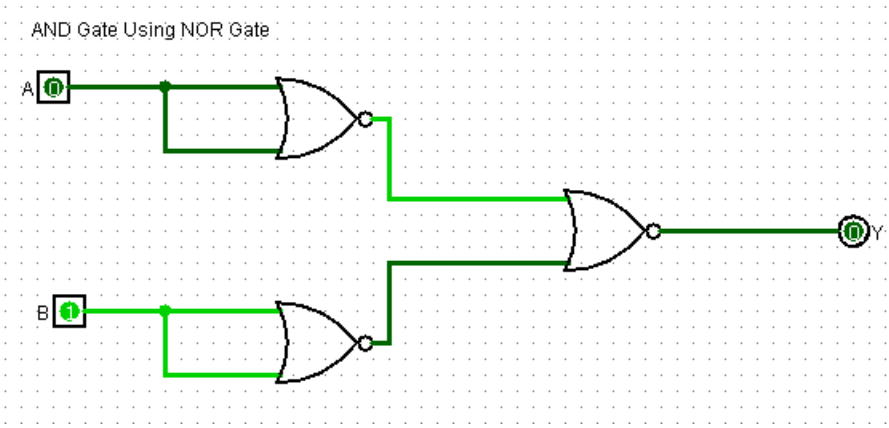

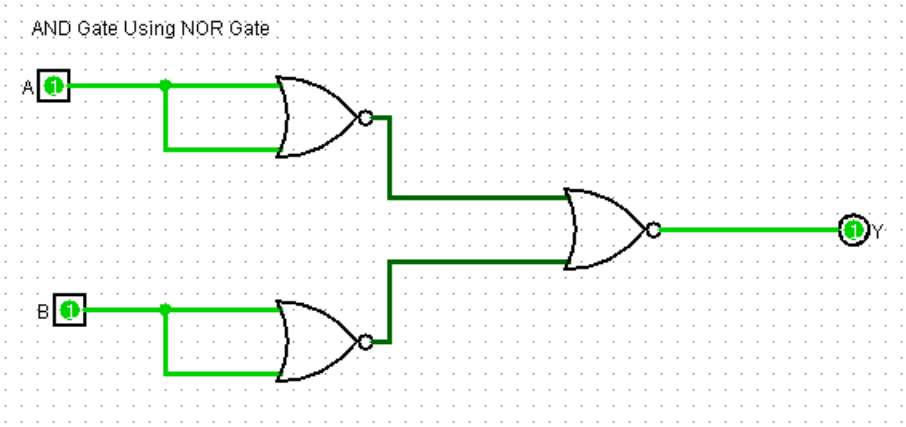

- Truth table:

A	B	Y
0	0	0
0	1	0
1	0	0
1	1	1

- **Implementation of OR Gate USING NOR Gate:**

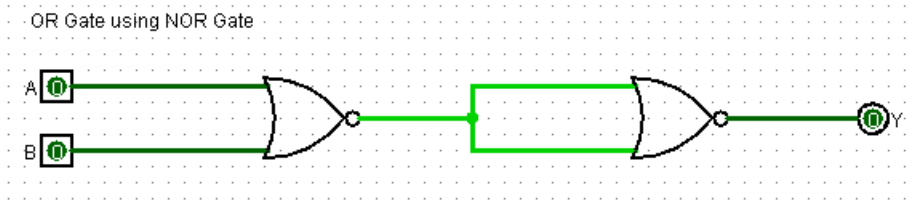

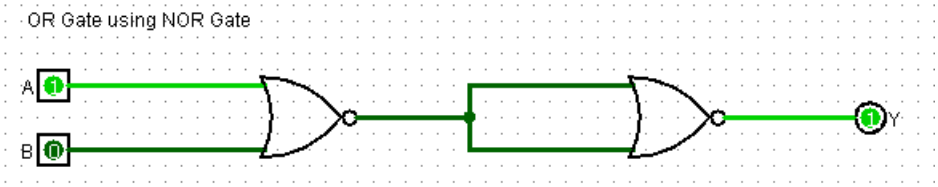

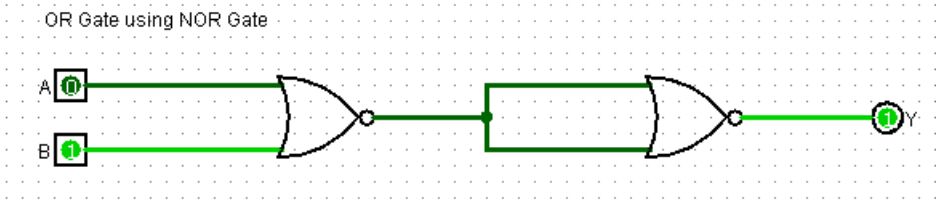

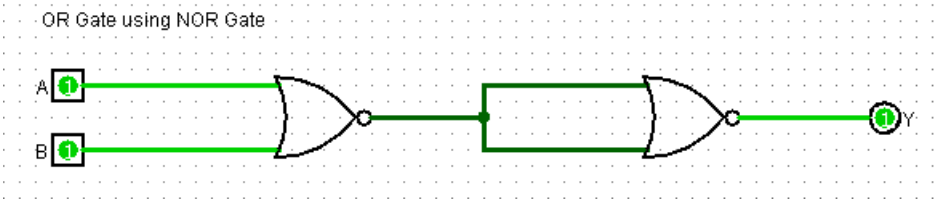

- Truth table:

A	B	Y
0	0	0
0	1	1
1	0	1
1	1	1

- **Implementation of AND Gate USING NAND Gate:**

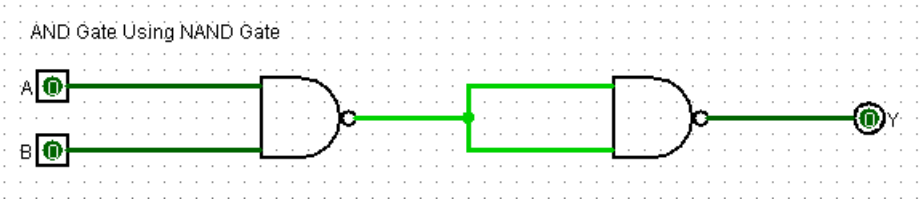

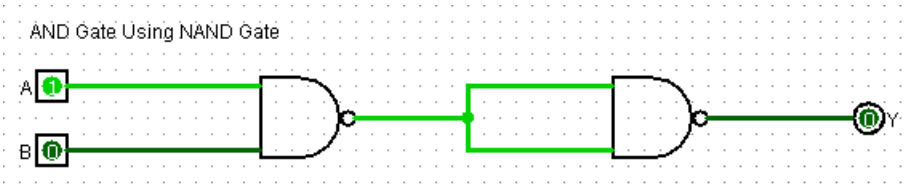

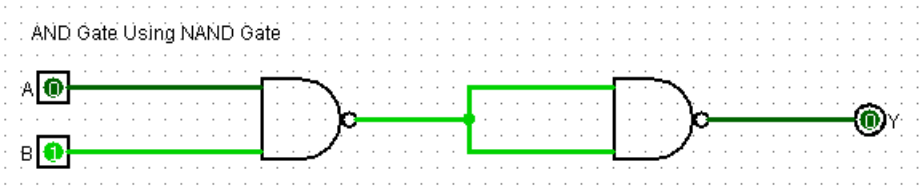

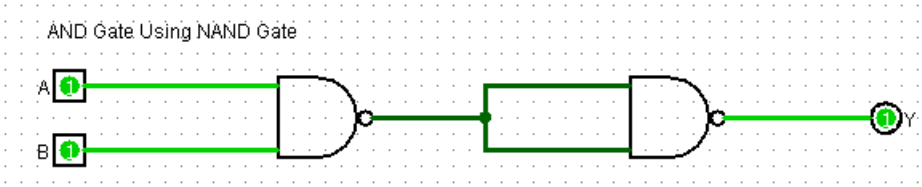

- Truth table:

A	B	Y
0	0	0
0	1	0
1	0	0
1	1	1

- **Implementation of OR Gate USING NAND Gate:**

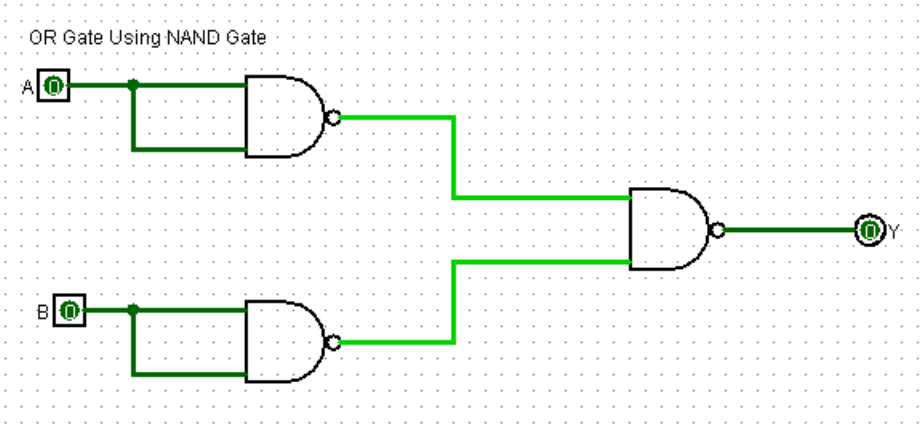

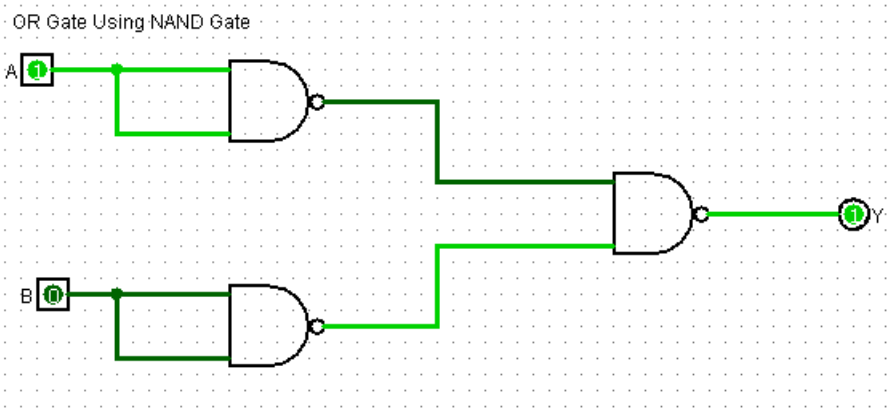

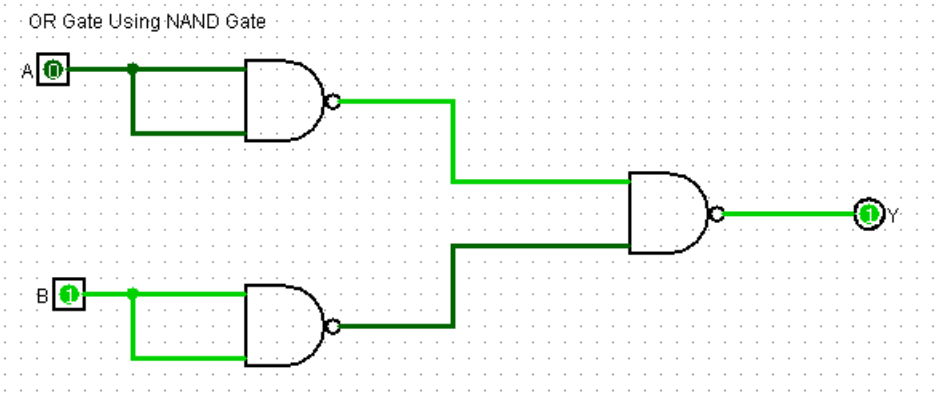

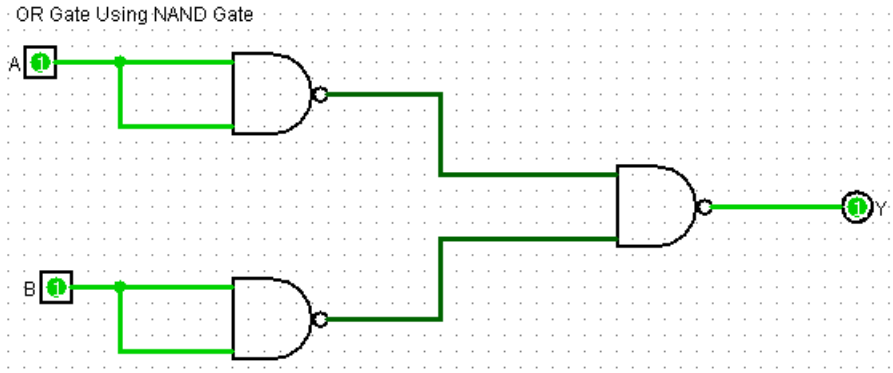

- Truth table:

A	B	Y
0	0	0
0	1	1
1	0	1
1	1	1

Result: Truth Table of logic gates are verified via logisim.

Conclusion: Circuit simulation and their TT verification can be achieved using open source “Logisim” software.